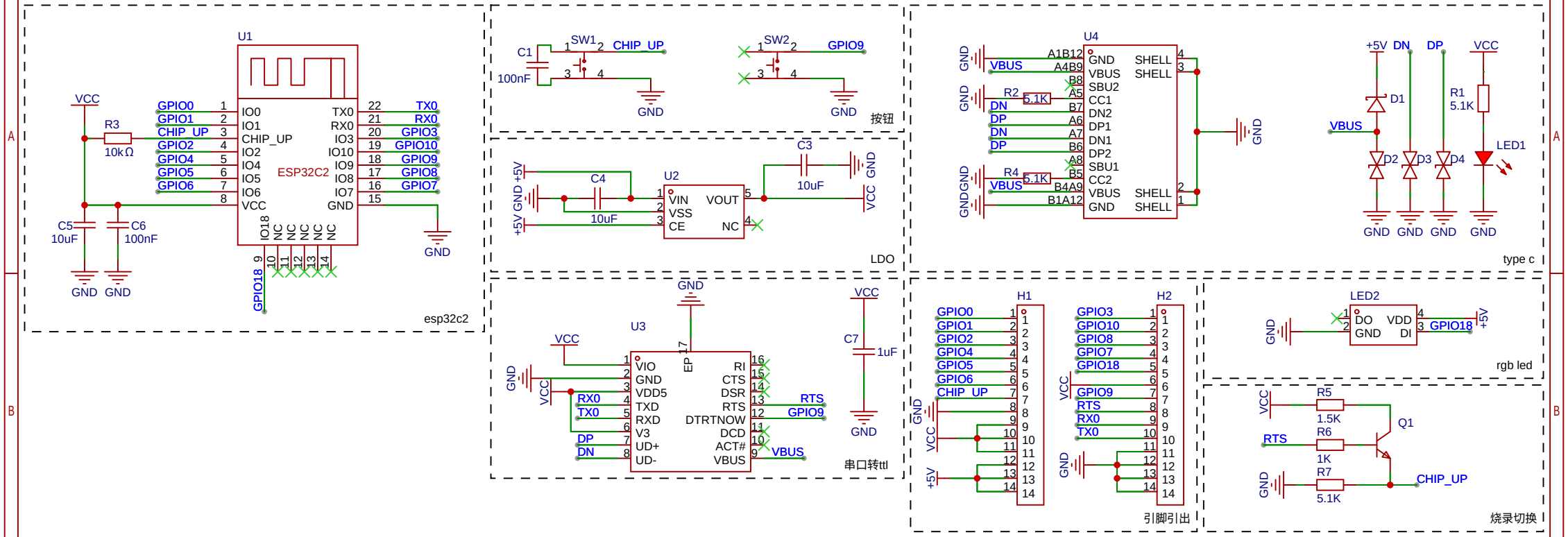

Schematic	WT9901C2-SN2原理图	Update Date	2022-09-23
		Create Date	2022-07-18
Page	main	Part Number	
Drawed		WT9901C2-SN2	
Reviewed			
		VER	SIZE	PAGE 1 OF 1

嘉立创EDA